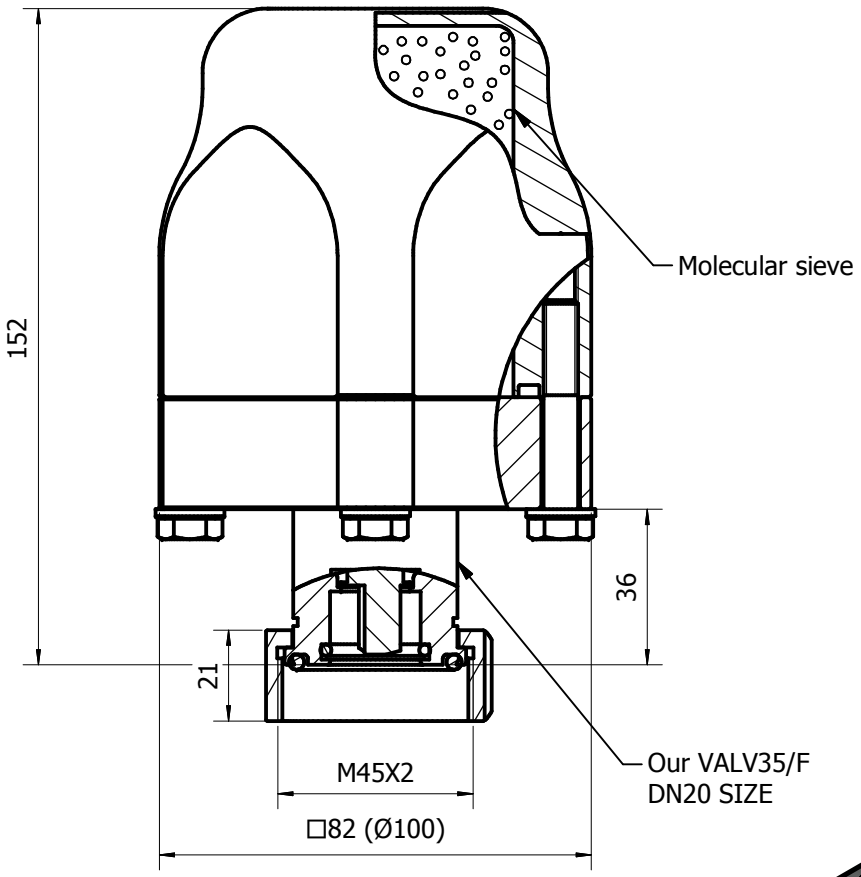

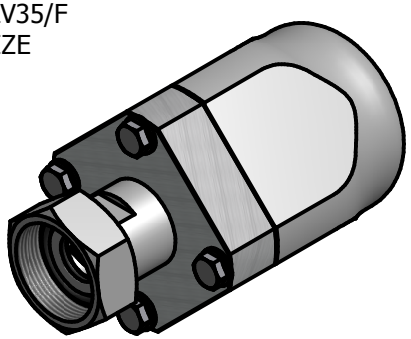

TECHNICAL FEATURES:

- ABSORBER'S BODY MATERIAL : EN AW-6082
- FLANGE AND VALVE'S MATERIAL : EN AW-6082
- SCREW'S MATERIAL : AISI316
- ABSORBER TO BE USED FOR VOLUMES <1M ^{3}
- SUITABLE FOR VALVES DN20 ELECTRONSYSTEM MD
- LEAKAGE RATE <1X10-8 MBAR x L/S.

- THE ABSORBER WILL BE DELIVERED WITH SF6 ATMOSPHERIC PRESSURE INSIDE

SUITABLE CONNECTING PARTS

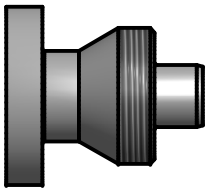

VALV2650 DWG.43902650

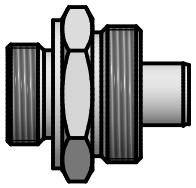

VALV6160 DWG.43906160

Rev./Mod	Descrizione:	Data
A	Technical features revised	06/11/2014
B	ADD MILLED	24/03/2015

Prep. Dis. max	Resp. Dep. Uff. Resp. Uff. Tecnico	ELECTRONSYSTEM MD S.r.l.
App. P. CIBOLDI	Creation date: 04/07/2014	Version:
Rev./Mod. 0		Title / Titolo / Apparatus / Apparecchio: **Humidity Absorber DN20 ABS7631**
		Lang. / Lingua
		Scale / Scala 1:1
NOTE :		Doc. No. / N° Doc. **43907631**
		Sh.No. / N° Pag. 1