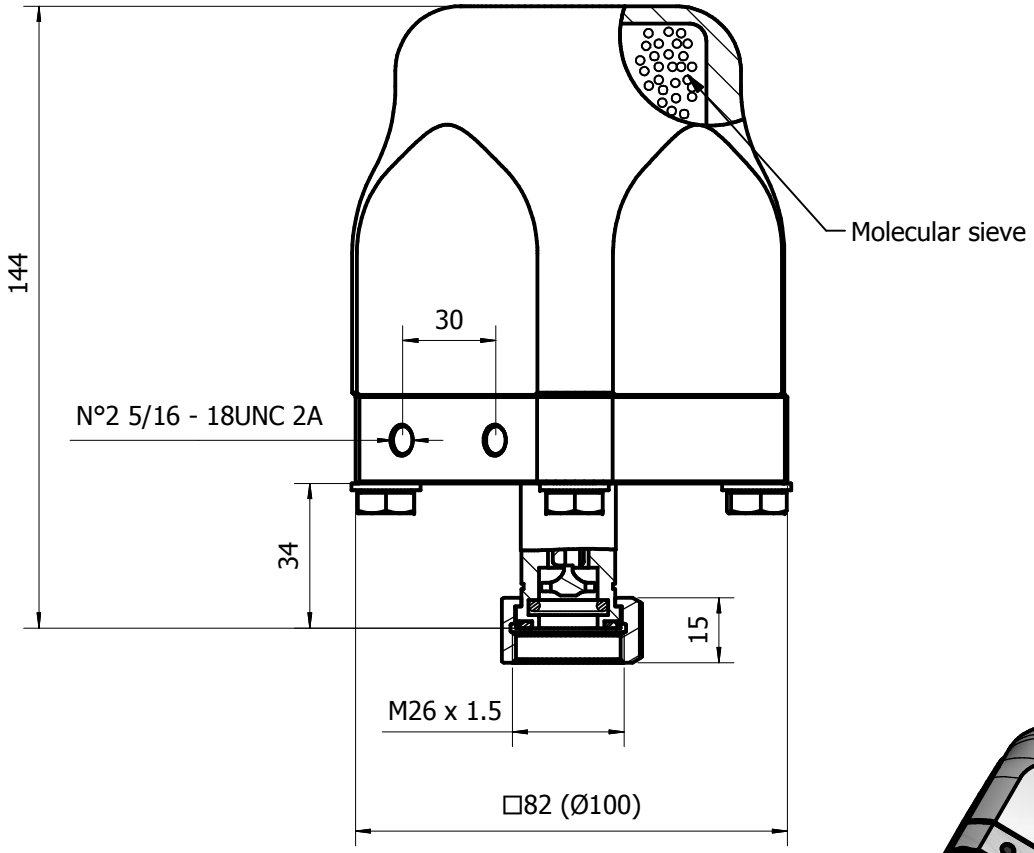

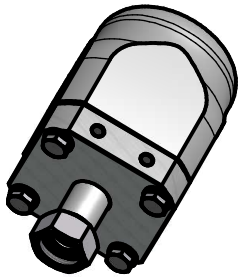

TECHNICAL FEATURES:

- ABSORBER'S BODY MATERIAL : EN AW-6082
- FLANGE AND VALVE'S MATERIAL : EN AW-6082
- SCREW'S MATERIAL : AISI316
- ABSORBER TO BE USED FOR VOLUMES <1M^3
- SUITABLE FOR VALVES DN8 ELECTRONSYSTEM MD
- LEAKAGE RATE <1X10-8 MBAR x L/S.
- VALVE'S MATERIAL: STAINLESS STEEL
- THE ABSORBER WILL BE DELIVERED WITH SF6 ATMOSPHERIC PRESSURE INSIDE

SUITABLE CONNECTING PARTS

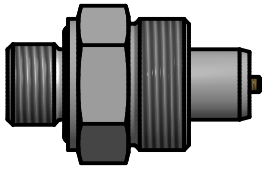

VALV25/X DWG. 43902260

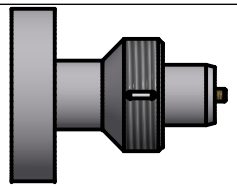

VALV2640 DWG.43902640

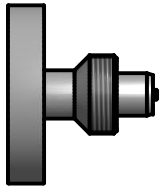

VALV6060 DWG.43906060

Prep. Dis. N.PEREGO	Resp. Dep. Uff. Resp. Uff. Tecnico	ELECTRONSYSTEM MD S.r.l.			
App. M.BOSISIO	Creation date: 12/03/2015	Version:	Title Titolo Apparatus Apparecchio **HUMIDITY ABSORBER DN8 ABS8819**	Lang. Lingua	
Rev./Mod. 0				Scale Scala	1:1
NOTE :			Doc. No. N° Doc. **43908819**	Sh.No. N° Pag.	1

Rev./Mod Descrizione: Data