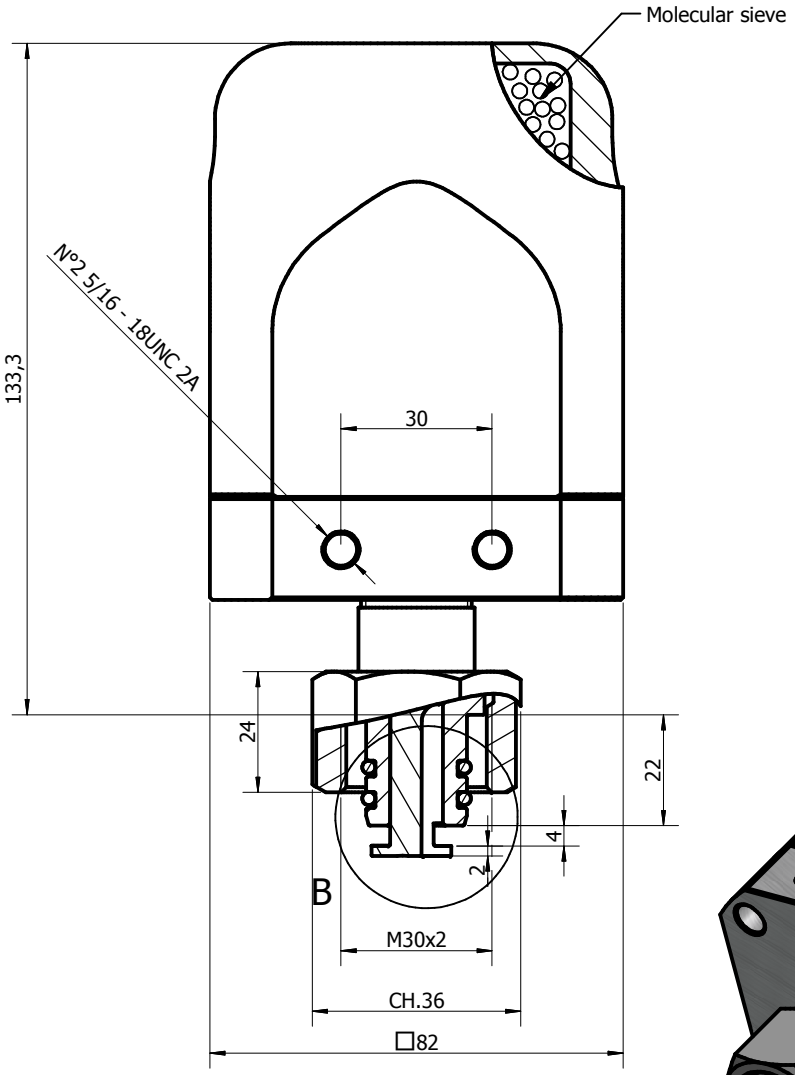

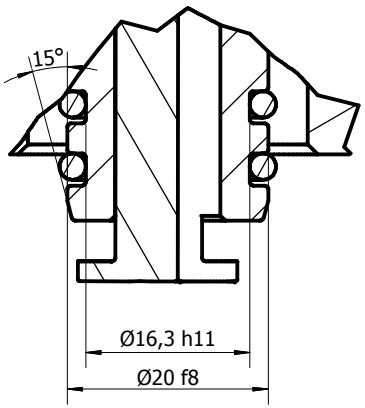

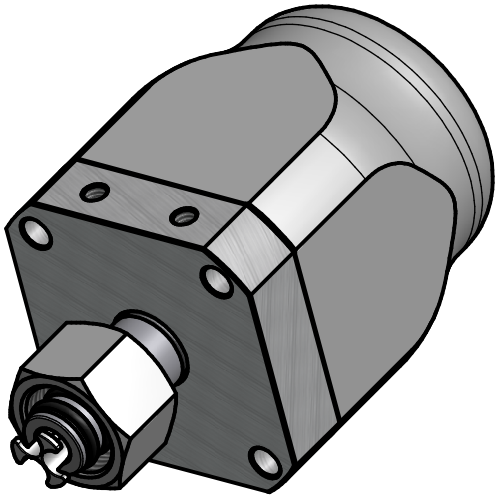

SUITABLE CONNECTING PARTS

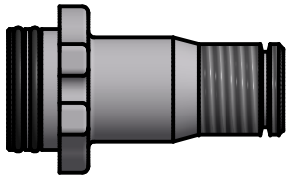

VALV8245 DWG. 43908245

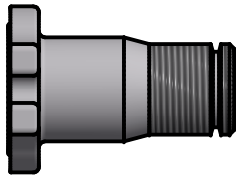

VALV8260 DWG.43908260

TECHNICAL FEATURES:

- ABSORBER'S BODY MATERIAL : EN AW-6082
- SCREW'S MATERIAL : AISI316
- ABSORBER TO BE USED FOR VOLUMES <1M^3
- LEAKAGE RATE <1X10-8 MBAR x L/S.
- VALVE'S MATERIAL: STAINLESS STEEL
- THE ABSORBER WILL BE DELIVERED WITH SF6 ATMOSPHERIC PRESSURE INSIDE

Prep. Dis. N.PEREGO	Resp. Dep. Uff. Resp. Uff. Tecnico	ELECTRONSYSTEM MD S.r.l.			
App. M.BOSISIO		Version:	Title Titolo Apparatus Apparecchio **HUMIDITY ABSORBER ABS8922**	Lang. Lingua	
Rev./Mod. 0	Creation date: 02/04/2015			Scale Scala	1:1
NOTE :			Doc. No. N° Doc. **43908922**	Sh.No. N° Pag. 1	

Rev./Mod Descrizione: Data