General Purpose Transmitter

Features

- Measuring ranges from 100mbar to 600bar
- Absolute, gauge and sealed gauge
- Accuracy: ±0.5%FSO(Typ.), ±0.25%FSO
- Calibrated and temperature compensated
- Stainless steel pressure sensor
- Variety of Pressure & Electrical connections
- Output 4...20mA, I²C, MODBUS, HART and other

Application

- Hydraulic and pneumatic
- Machine building
- Pumps
- Chemical industry

Via Madonna delle Rose, 72 24061 Albano S.Alessandro (BG) ITALY - Phone +39035584000, Fax +39035584099 E-mail: info@elecmd.it Web www.elecmd.it

General Purpose Transmitter

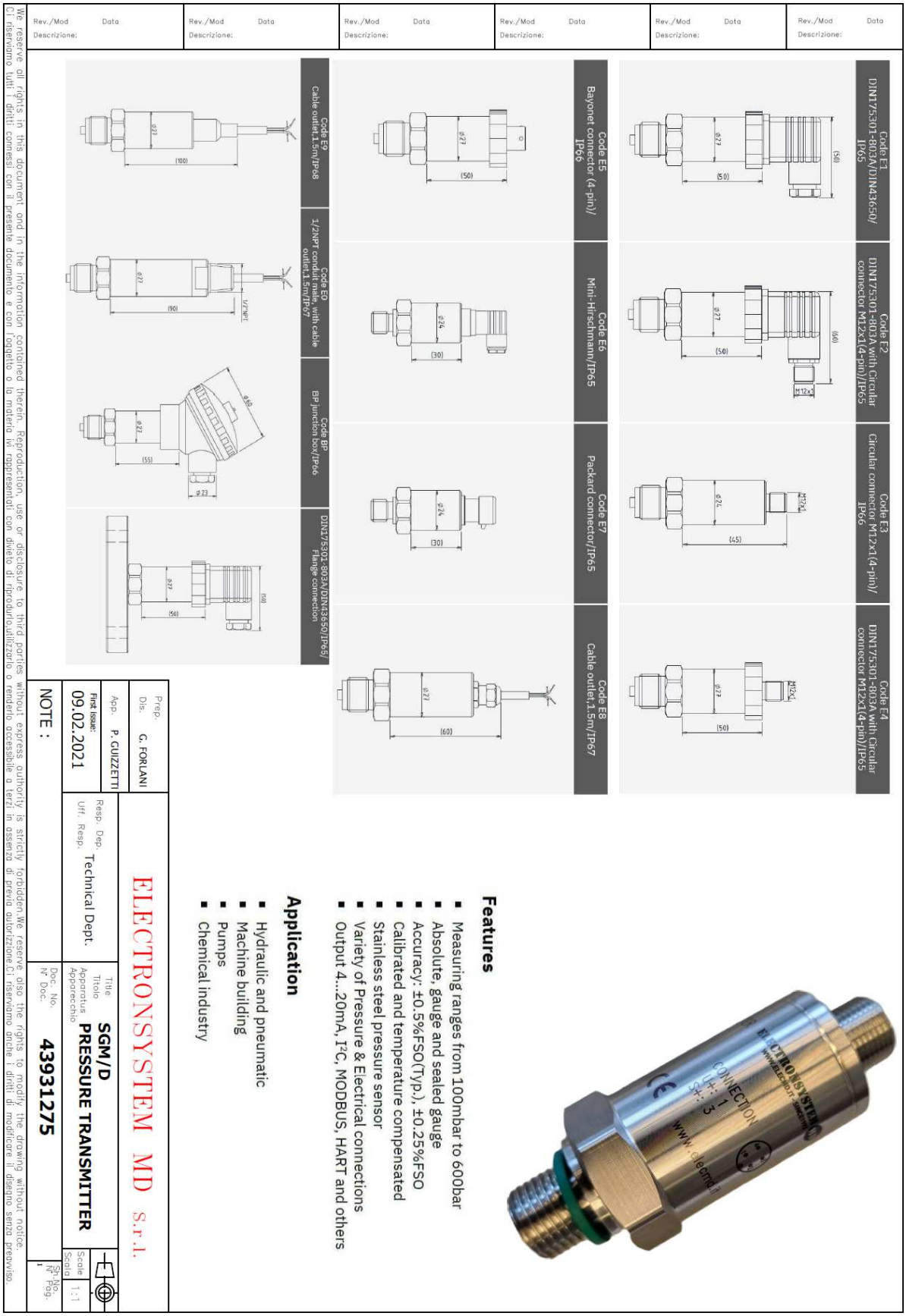

All specs are subject to change without notice

ELECTRONSYSTEM MD
Design and products for safety problem solving in medium and high voltage electrical installations

Measuring ranges

G: Gauge pressure
A: Absolute pressure

Code	Range [bar]	Type
0001	-0.6...0	G
0002	-0.4...0	G
0003	-0.25...0	G
0004	-0.1...0	G
0005	-1...0	G
0006	-1...+1	G
0007	-1...+3	G
0008	-1...+9	G
0009	-1...+15	G
0010	-1...+16	G
0011	0...0.1	G
0012	0...0.16	G
0013	0...0.25	G
0014	0...0.4	G
0015	0... 0.5	G
0016	0...1	G
0017	0...1.6	G
0018	0...2.5	G
0019	0...4	G
0020	0...6	G
0021	0...10	G
0022	0...16	G
0023	0...25	G
0024	0...40	G
0025	0...60	G
0026	0...100	G
0027	0...160	G
0028	0...200	G
0029	0...250	G
0030	0...300	G
0031	0...400	G
0032	0...600	G
0033	0...0.4	A
0034	0...0.6	A
0035	0...1	A
0036	0...1.6	A
0037	0...2	A
0038	0...2.5	A
0039	0...4	A
0040	0...6	A
0041	0...10	A
0042	0...16	A
0043	0...25	A
0044	0.8...1.2	A

Performance Specifications

General

Pressure Range [bar]	100 mbar to 600 bar
Overpressure [bar]	1.5xFS (FS≤250bar),1.2xFS(FS≥300bar)

Environmental

Medium Temp. Range [°C]	-20 to +85°C, 0 to 125 °C
Compensated Temp. Range [°C]	-10 to +70°C
Vibration	20 gRMS(20 to 2000Hz)
Shock	100 g(10ms)
Cycles	$10x10^5$ cycles

Electrical @25°C

Output Signal	4...20 mA, 1...5 VDC, 0.5...4.5 VDC, 0...10 VDC 0...2.5 VDC, RS485, I²C, HART
Power Supply	12...36VDC, 5VDC, 3.3VDC
Load Resistance	<(Vs-12)/0.02A [For current output]
Insulation Resistance	100 MΩ@50VDC
EMC Test	IEC61000-6-2/IEC61000-6-3

Physical Specifications

Housing	304 stainless steel / 316 stainless steel
Diaphragm	316L stainless steel/Titanium alloy/Tantalum
Protection	IP65/IP66/IP67/IP68

Performance

Accuracy[2] [% FSO]	±0.5[typ.], ±0.75[max.]
Temp. Coeff - Zero [% FSO]	±0.75[typ.], ±1.5[max.]
Temp. Coeff - Span [% FSO]	±0.75[typ.], ±1.5[max.]
Long-Term Stability [% FSO]	±0.3[typ.], ±0.5[max.]

Notes
1. All values measured at 25°C
2. Including non-linearity, hysteresis and repeatability.
The listed specifications and dimensions are subject to change without prior notice.

Prep. Dis. G. FORLANI	ELECTRONSYSTEM MD S.r.l.		
App. P. GUIZZETTI	Resp. Dep. / Uff. Resp. Technical Dept.	Title / Titolo / Apparatus / Apparecchio: SGM/D PRESSURE TRANSMITTER	Scale / Scala 1:1
First issue: 09.02.2021			
NOTE :		Doc. No. / N° Doc. 43931275	Sh. No. / N° Pag. 2

Rev./Mod Descrizione: Data

We reserve all rights in this document and in the information contained therein. Reproduction, use or disclosure to third parties without express authority is strictly forbidden.We reserve also the rights to modify the drawing without notice.
Ci riserviamo tutti i diritti connessi con il presente documento e con l'oggetto o la materia ivi rappresentati con divieto di riprodurlo,utilizzarlo o renderlo accessibile a terzi in assenza di previa autorizzione.Ci riserviamo anche i diritti di modificare il disegno senza preavviso.

All specs are subject to change without notice

Via Madonna delle Rose, 72 24061 Albano S.Alessandro (BG) ITALY - Phone +39035584000, Fax +39035584099 E-mail: info@elecmd.it Web www.elecmd.it

General Purpose Transmitter

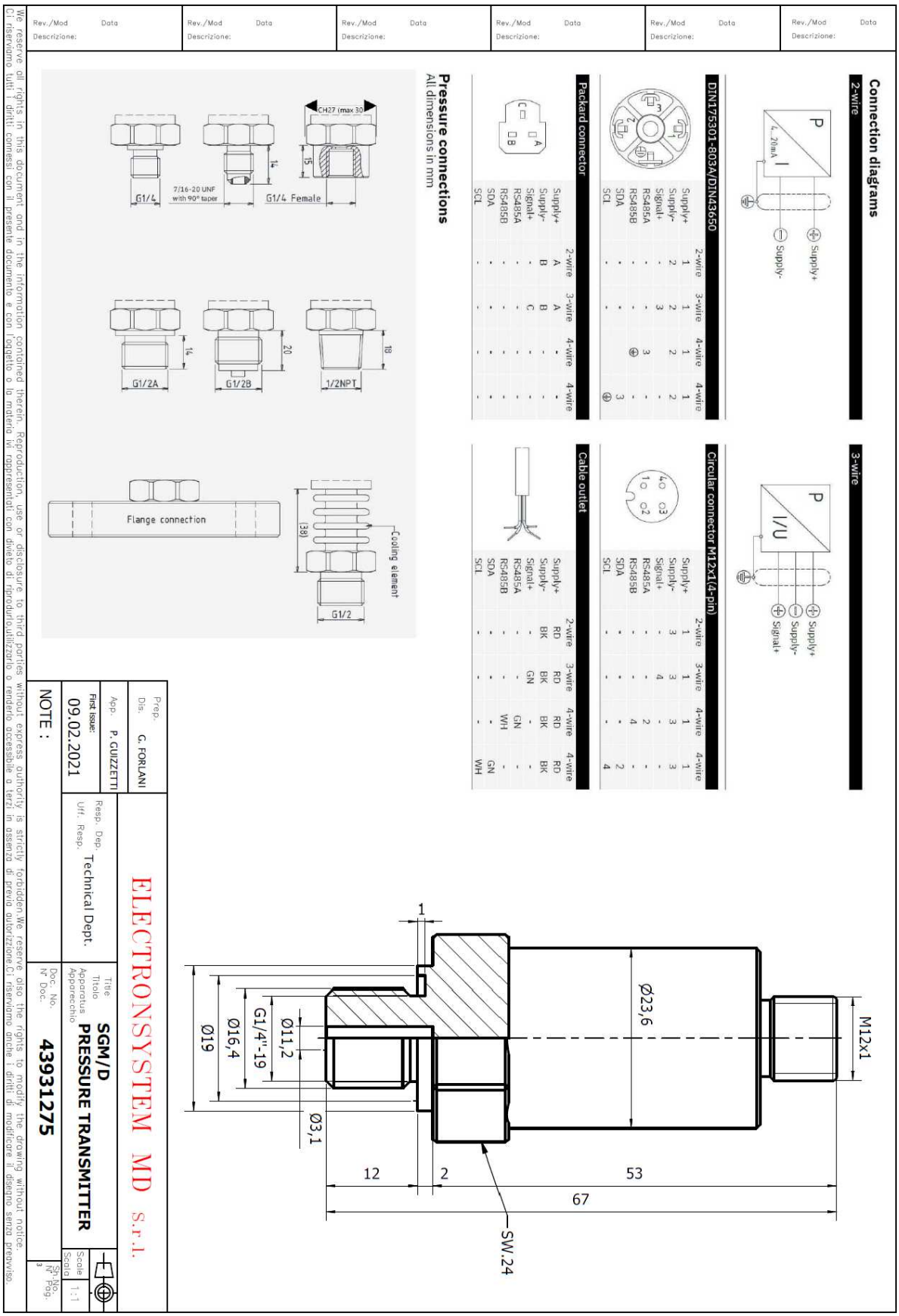

All specs are subject to change without notice

General Purpose Transmitter

Ordering information

Order Nr.	1	2	3	4	5	6	7	8	9	10	11
Example	SGM/D	0010	42	S1	A3	E1	01	M1	L1	S	-

1	Model
SGM/D	Pressure Transmitter

2	Pressure range
XXXX	See measuring ranges table. [Pressure unit: kPa,psi,mH2O,inchH2O,kg/cm2, etc.]

3	Output Signal
42	4 to 20 mA
24	20 to 4 mA
02	0 to 20 mA
05	0 to 5 VDC
15	1 to 5 VDC
45	0.5 to 4.5 VDC ratiometric
25	0 to 2.5 VDC
10	0 to 10 VDC
R4	RS485 MODBUS RTU
R2	4 to 20 mA with RS485 MODBUS RTU
H2	4 to 20 mA with HART
2C	I^2C digital interface

4	Power supply
S1	DC 12 to 30 V
S2	DC 15 to 30 V [For 0 to 10VDC output]
S3	DC 24 V
S4	DC 12 V
S5	DC 9 V
S6	DC 5 V [For 0.5 to 4.5VDC output and I^2C digital interface]
S7	DC 3.3 V [For I^2C digital interface]

5	Accuracy
A1	0.1 %FS
A2	0.25 %FS
A3	0.5 %FS (standard)
A4	1.0 %FS

6	Electrical Connection
E1	DIN175301-803A/DIN43650/IP65
E2	DIN175301-803A with Circular connector M12x1(4-pin)/IP65
E3	Circular connector M12x1(4-pin)/IP66
E4	Hirschmann with Circular connector M12x1(4-pin)/IP66
E5	Bayonet connector/IP66
E6	Mini-Hirschmann/IP65
E7	Packard connector/IP65
E8	Cable outlet,1.5m/IP67
E9	Cable outlet,1.5m/IP68
E0	1/2NPT conduit male, with cable outlet,1.5m/IP67
BP	BP junction box/IP66

7	Pressure Connection
01	G⅛ male
02	G¼ male
03	G½ male
04	G¼B male
05	G½B male
06	G¼ female
07	G½ female
08	½NPT female
09	¼NPT male
10	½NPT male
11	PT¼ male
12	PT½ male
13	PT⅜ male
14	R¼ male
15	R½ male
16	M20x1.5 male
17	M12x1.5 male
18	7/16-20 UNF with 74° taper
19	7/16-20 UNF with 90° taper
20	Flange connection (Please specify flange specifications)
99	99 - Custom requirements

8	Diaphragm Material
M1	SUS316L stainless steel (standard)
M2	Titanium alloy
M3	Tantalum

9	Sealing structure
L1	NBR seal O-ring (standard)
L2	VITON seal O-ring
L3	Welding seal

10	Label
S	Standard
N	Neutral packing
C	Custom label

11	Accessory [Optional]
A1	DP-4 DIN43650 LCD display head
A2	DP-5 DIN43650 LED display head
A3	DP-6 DIN43650 LCD display head
A4	DP-7 DIN43650 LCD display head
A5	DP-10 External display instrument
A6	Cooling element(Temperature<125°C)

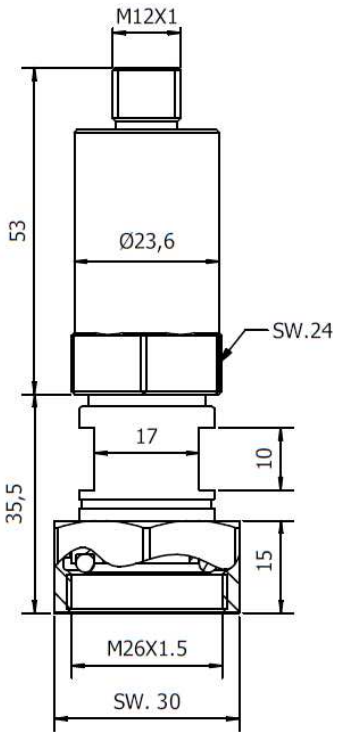

DN8 VERSION

Prep. Dis. G. FORLANI	ELECTRONSYSTEM MD S.r.l.		
App. P. GUIZZETTI	Resp. Dep. Uff. Resp. Technical Dept.	Title Titolo Apparatus Apparecchio SGM/D PRESSURE TRANSMITTER	Scale Scala 1:1
First issue: 09.02.2021			
NOTE :		Doc. No. N° Doc. 43931275	Sh.No. N° Pag. 4

We reserve all rights in this document and in the information contained therein. Reproduction, use or disclosure to third parties without express authority is strictly forbidden.We reserve also the rights to modify the drawing without notice.
Ci riserviamo tutti i diritti connessi con il presente documento e con l'oggetto o la materia ivi rappresentati con divieto di riprodurlo,utilizzarlo o renderlo accessibile a terzi in assenza di previa autorizzione.Ci riserviamo anche i diritti di modificare il disegno senza preavviso.

All specs are subject to change without notice

Via Madonna delle Rose, 72 24061 Albano S.Alessandro (BG) ITALY - Phone +39035584000, Fax +39035584099 E-mail: info@elecmd.it Web www.elecmd.it

ELECTRONSYSTEM MD
Design and products for safety problem solving in medium and high voltage electrical installations

ELECTRONSYSTEM MD
Design and products for safety problem solving
in medium and high voltage electrical installations

MODBUS-RTU Protocol

Serial port setup:

Parity bit: N ; Data bits: 8; Stop bit:1; Baud Rate:9600;

CRC Check Polynomial:0xA001

The communication protocol can transfer the Signed Integer Arithmetic and also transfer the Floating-Point Arithmetic

1.Communication format:

Signed Integer Arithmetic output

A.Send Command(Read Data)

address	Function code	Data start bit (H)	Data start bit (L)	Data number (H)	Data number (L)	CRC16 (L)	CRC16 (H)
0X01	0X03	0X00	0X00	0X00	0X01	0X84	0X0A

B.Receive Command(Read Data)

address	Function code	Data length	Data (H)	Data (L)	CRC16 (L)	CRC16 (H)
0X01	0X03	0X02	0X00	0X01	0X79	0X84

C.Send Command(Modify Data)

address	Function code	Data start bit (H)	Data start bit (L)	Data (H)	Data (L)	CRC16 (L)	CRC16 (H)
0X01	0X06	0X00	0X00	0X00	0X02	0X08	0X0B

D.Receive Command(Modify Data)

address	Function code	Data start bit (H)	Data start bit (L)	Data (H)	Data (L)	CRC16 (L)	CRC16 (H)
0X01	0X06	0X00	0X00	0X00	0X02	0X08	0X0B

E.Return of abnormal response

address	Function code	Abnormal Code	CRC16 (L)	CRC16 (H)
0X01	0X80+Function code	0x01(Illegal function) 0x02(Illegal address) 0x03(Illegal data)		

Integer supported commands and meaning of command

Function code	Data Offset (Decimal)	Data number	byte	data area	meaning of command
0x03 Function code read data					
Read area of Integer Arithmetic					
0x03	0	1	2	1-255	Slave Address
0x03	1	1	2	0-1200 1-2400 2-4800 3-9600 4-19200 5-38400 6-57600 7-115200	Baud Rate
0x03	2	1	2	0- No check 1- ODD 2- EVEN	0- No check 1- Odd check 2- EVEN check
0x03	3	1	2	0- Kpa 1- Mpa 2- Ma 3- % 4- Inh2o 5- Fth2o 6- MmH2O 7- MmHg 8- PSI 9- Bar 10- Mbar 11- Kg/cm2 12- Pa 13- Torr 14- Atm 15- 16- M 17- Cm 18- Mm 19- inHg 20- mHg 21- Mh2O 22- ℃	Pressure Unit
0x03	4	1	2	0-#### 1-###.# 2-##.## 3-#.### 4-#.####	Decimal point
0X03	5	1	2	0-30	Filtering Coefficient
0x03	6				
The above is operation of Integer Arithmetic					
Floating-Point Arithmetic read area					
Function code(Hexa	Offset address (Decimal)	length	byte	Data area	Remarks

All specs are subject to change without notice

decimal）					
0x03	22-23	2	4	4 byte floating-point	Pressure measurement
0x03	24-25	2	4	4 byte floating-point	Master variable of Pressure offset
0x03	26-27	2	4	4 byte floating-point	Range minimum of Pressure Transmitter
0x03	28-29	2	4	4 byte floating-point	Range maximum of Pressure Transmitter
0x03	30-31	2	4	4 byte floating-point	Range minimum of Pressure Sensor
0x03	32-33	2	4	4 byte floating-point	Range maximum of Pressure Sensor
0x03	38-39	2	4	4 byte floating-point	PT100 measured value
0x03	42-43	2	4	0-1.00000	Gain coefficient of main variable of pressure
0x03	166-167	2	4	4 byte floating-point	Zero clearing of Pressure Transmitter
The above is Floating-Point Arithmetic read area					
0x06 Function code Modify data					
0x06/0x10	0	1	2	1-255	Modify slave address
0x06/0x10	1	1	2	0-1200 1-2400 2-4800 3-9600 4-19200 5-38400 6-57600 7-115200	Modify Baud Rate
0x06/0x10	2	1	2	0- NO check 1- ODD 2- EVEN	Modify Check mode
0x06/0x10	24-25	2	4	4 byte floating-point	Zero offset value.Pressure value=measured value+Zero Offset value
0x06/0x10	166-167	2	4	4 byte floating-point	Zero clearing value of Pressure Transmitter
SAVE					

0x06	65535	1	2	0- Save to user zone	Write this address to 0, save the data to the user area and save the power off. If you do not send the power down save instruction, then modify the data off the electricity loss.
0x06	65533	1	2	Password service area	Address, checksum, baud rate modification without password, and other data changes should first write to this address, data 0x1234 is allowed to modify.
0x06	65532	1	2	0-Go back to Factory calibration status	The user writes this address to 0 to restore the factory data. It is all data recovery. Both the user setting data and the calibration data will be restored to the factory status.

For the transmission of floating-point Arithmetic, refer to the provisions of the MODBUS-RTU protocol regarding the transfer of multi byte floating point Arithmetic.

Read the pressure command, for example: (HEX)

Tx:01 03 00 16 00 02 25 CF
01 slave address,
03 Function code,
00 16 Offset address,
00 02 Data number

Rx:01 03 04 BE 40 E6 12 15 A2
01 slave address
03 Function code
04 Bytes
BE 40 E6 12(-0.188378，IEEE 754 Standard for Floating-Point Arithmetic)
Note the distinction between the data in the protocol, such as the offset address 22 (Decimal), and the Hexadecimal notation of 16. Note the difference.

ELECTRONSYSTEM MD
Design and products for safety problem solving in medium and high voltage electrical installations
All specs are subject to change without notice

STORAGE

If the complex must be storage before use, please keep dry and repaired.
Do not leave outdoor.
Device is strongly sensitive to humidity hence avoid to store where relative humidity is more than 90%

STORAGE TEMPERATURE: -30°C ÷ +70°C
RELATIVE HUMIDITY: max 90% @ +40°C

MAINTENANCE

Maintenance of transmitter must be done compulsory in factory. We recommend every 5 years to send back transmitter for calibration check and inspection.

WARRANTY

Device is covered by 24 months after installation or max 36 months after delivery.
In case of service the transmitter must be sent back to factory for inspection.

WARNINGS

CAUTION
Do not drop or hit the transmitter. The sensor is fragile and may break from sudden shock.
When transporting the transmitter, use the original shipping box from Electronsystem.

NOTE
Keep the transmitter dry and clean.
Do not remove the transparent transport protection caps before you are ready to install the transmitter.

Via Madonna delle Rose, 72 24061 Albano S.Alessandro (BG) ITALY - Phone +39035584000, Fax +39035584099 E-mail: info@elecmd.it Web www.elecmd.it

INSTALLATION

1. Remove the transport caps when you are ready to install the transmitter. Check o-ring is clean without dust and properly assembled.

2. Install the transmitter to the mechanical coupling and tighten gently by hand. Then use a wrench to tighten the connection. Use a sufficient force to achieve a tight installation (recommended 10-15Nm) . The system must be leak-free for accurate measurement.

3. Prepare and fix the cable with some cable ties in order to avoid stress on the connector of the sensor. Use a cable with a suitable outdoor IP67 connector for your installation (straight or angled)

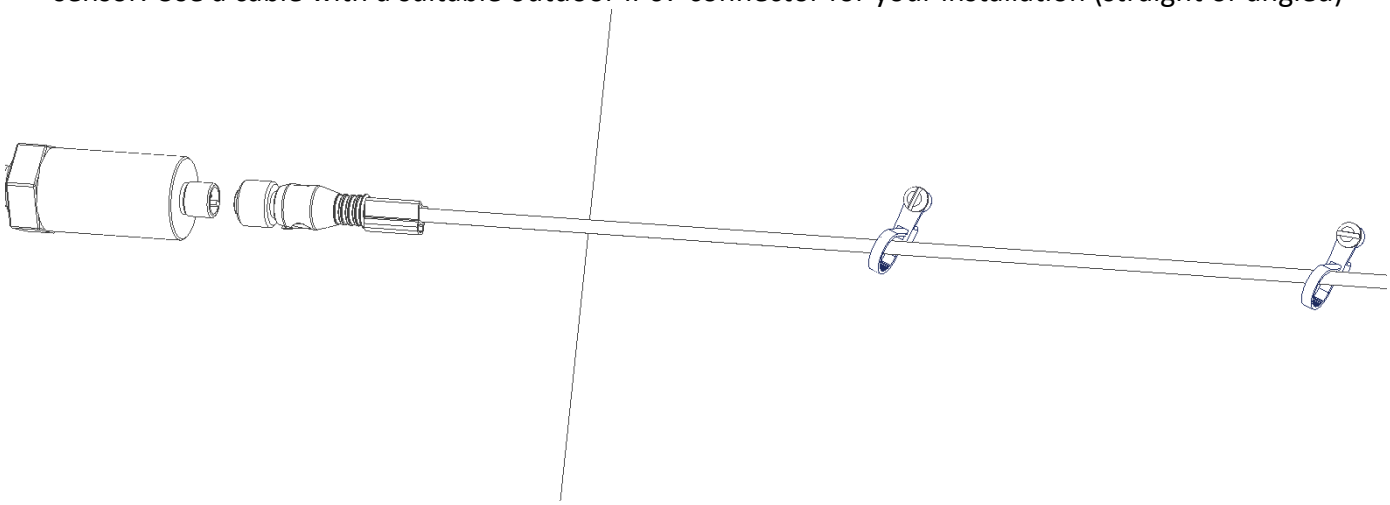

4. Connect the output port checking the correct polarization of the connector. Do not rotate the cable before the crown of the cable is completely fixed!

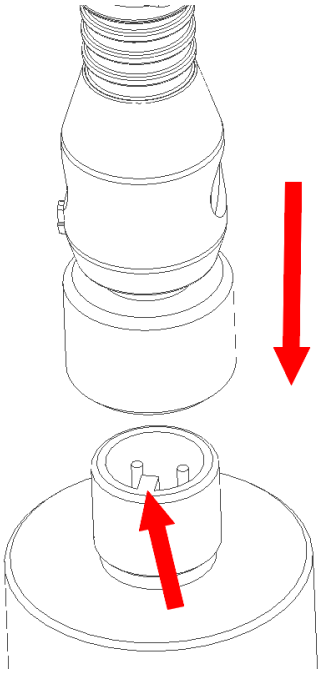

All specs are subject to change without notice

5. Turn firmly the rotating crown of the cable at max 0.4Nm

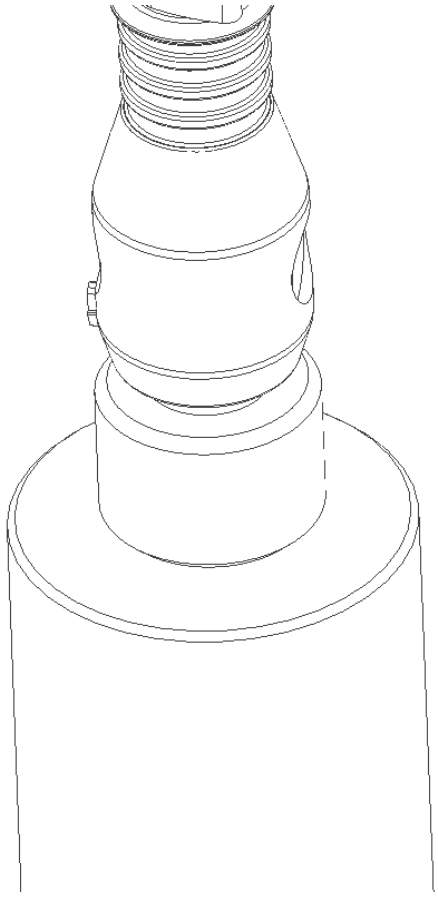

DISCLAIMER NOTE:

While we provide application assistance it is up to the customer to determine the suitability for its use.

Specification may change without notice.The information we supply is believed to be accurate and reliable as of this printing.
However we assume no responsibility for its use.

The quality of ElectronsystemMD products is guaranteed by a Quality, Safety and Environmental management system certified by DNV according to ISO 9001, ISO 18001 and ISO 14001. Electronsystem MD works in partnership with its customers in designing customized executions in order to meet specific requirements, please contact us.

Via Madonna delle Rose, 72 24061 Albano S.Alessandro (BG) ITALY - Phone +39035584000, Fax +39035584099 E-mail: info@elecmd.it Web www.elecmd.it