VOLTAGE DETECTING SYSTEMS



PD/V/VDIS

Phase Discriminator

Highlights:

- **Suitable for VDIS/LRM in accordance with IEC62271-213**
- **Small size, portable and low cost**
- **Snap in optical fiber connection to receiver**
- **Optical insulation guaranteed by optical fiber connection**
- **Local indication of phase concordance (<15°) or phase discordance (>60°)**
- **Local indication of correct link connection and signal detection**
- **Autodiagnostic test after power on**
- **Auto power off (optional)**
- **Local indication of battery low (optional)**
- **Local auditive indication op phase discordance (optional)**

PD is an optical phase discriminator and is able to detect signal coming from optoelectric devices by optical fiber connection.
In this way there's a second insulating path between divider capacitor and phase discrimination added to the first one guaranteed by optoelectric device.
PD is friendly use because is ready to work and has local indication of:

- red led or/and audio signal for phase discordance
- green led for phase concordance

A short duration test is built up after activation and allow to control efficiency of electronic parts and leds.
You can get phase indication only if the device receive correct signal both from ch.1 and ch.2 in order to avoid wrong discrimination.

Technical features

Power……battery 9V
Input :.....optical snap in fiber
Temperature range :..... -20°C ÷ 70°C
IP degree protection :.....IP55

Relè features

Material

Box :..... ABS Material
Connection input :……Insulating optical fiber



VOLTAGE DETECTING SYSTEMS

How to use PD

IN PHASE

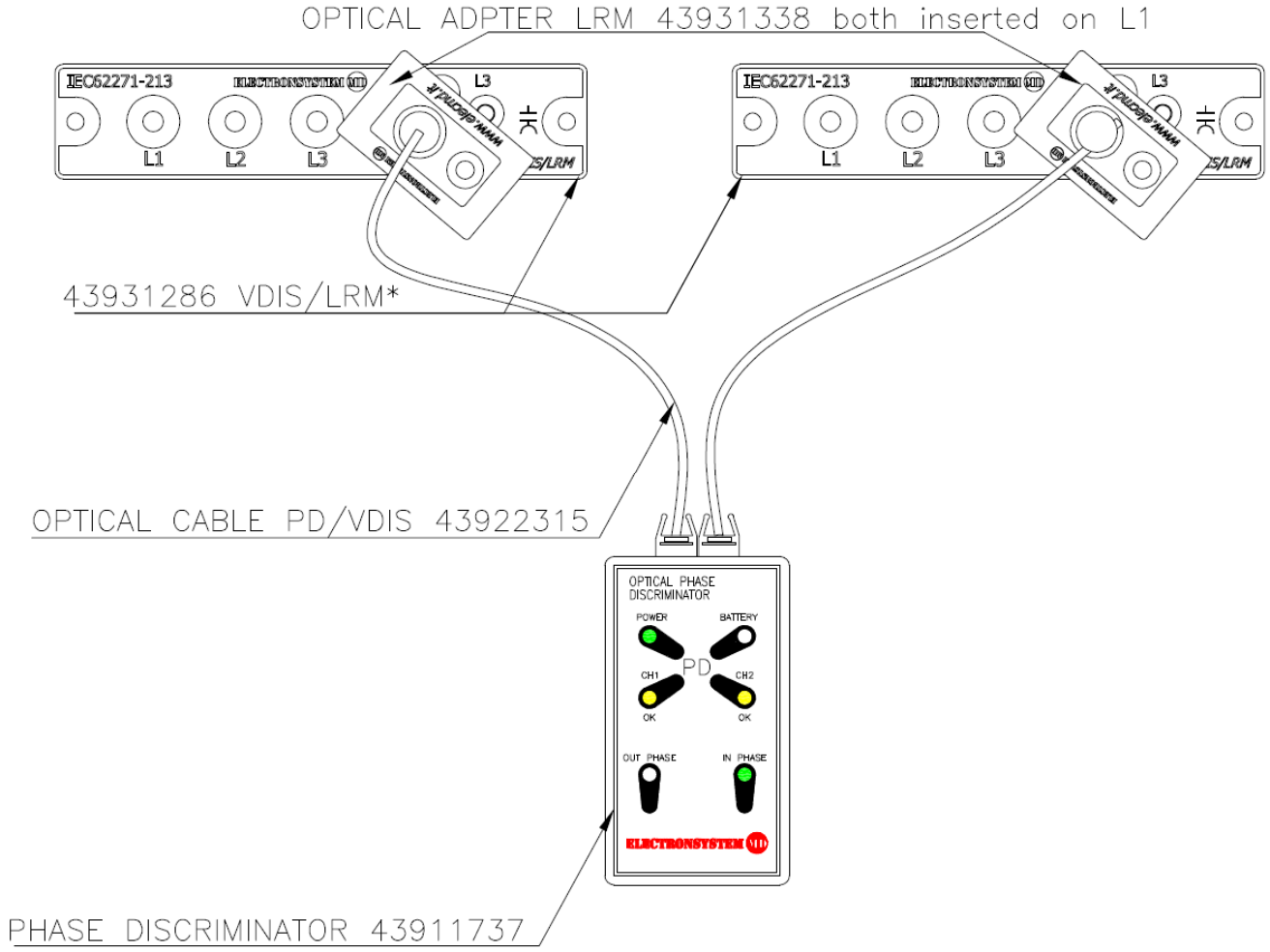

OUT OF PHASE

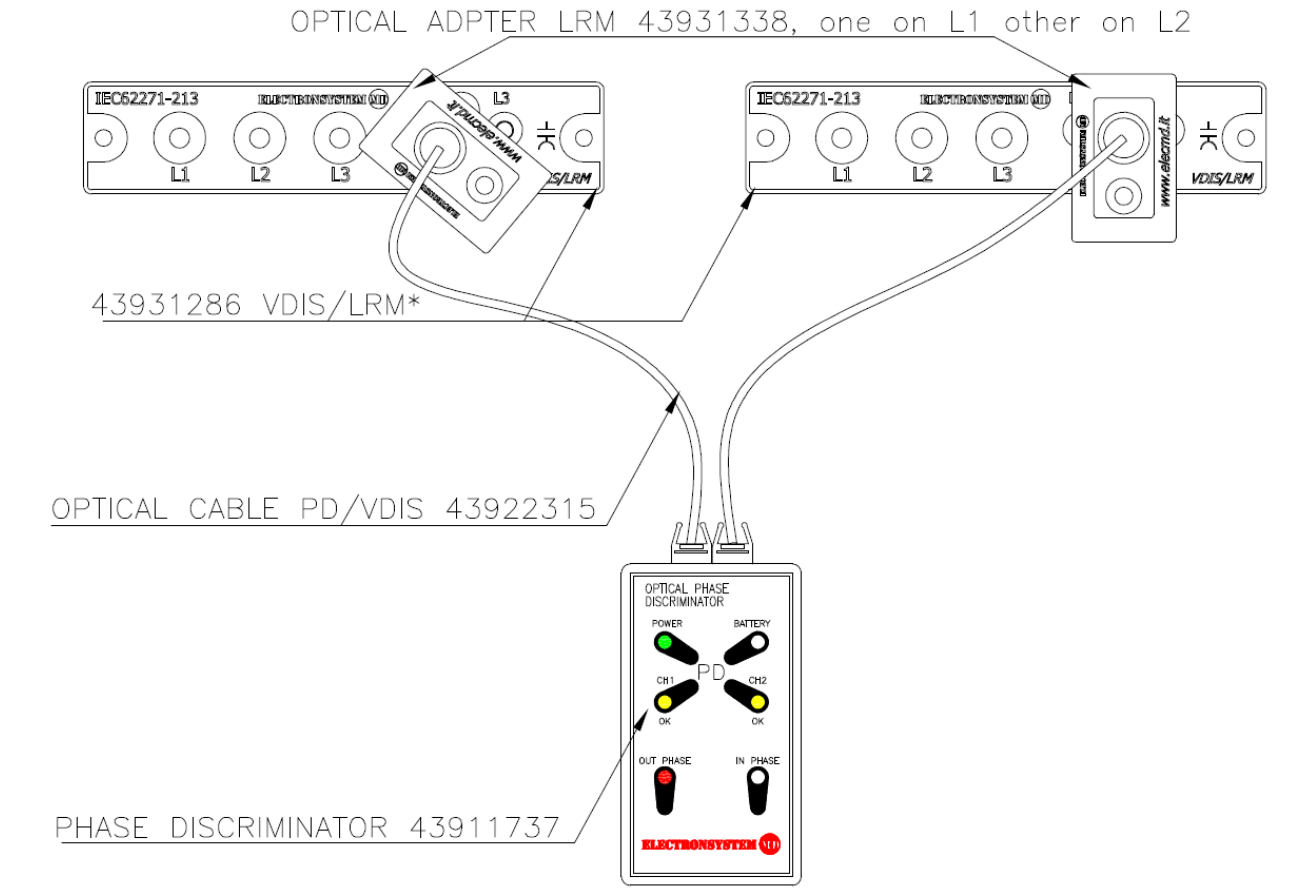

Dimension PD

Drawing: 43911737

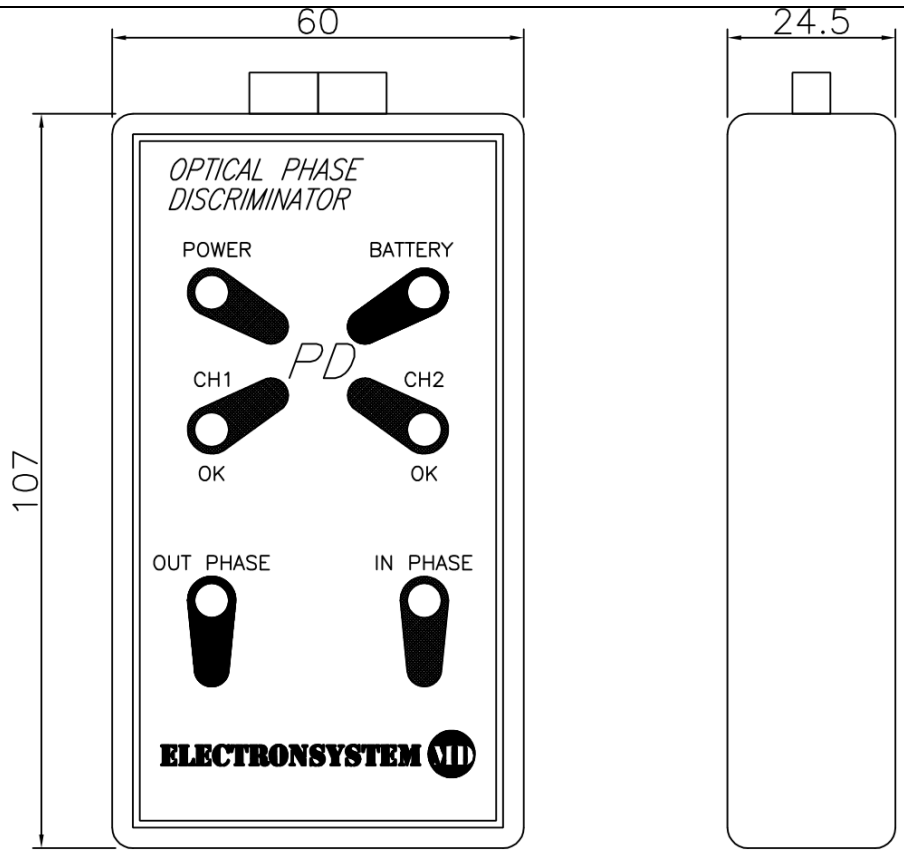

NOTE:
Fornito con n°2 fibre ottiche dis.n°43922251 (lx standard=2 mt)

Dimension PD/V

Drawing: 43911828

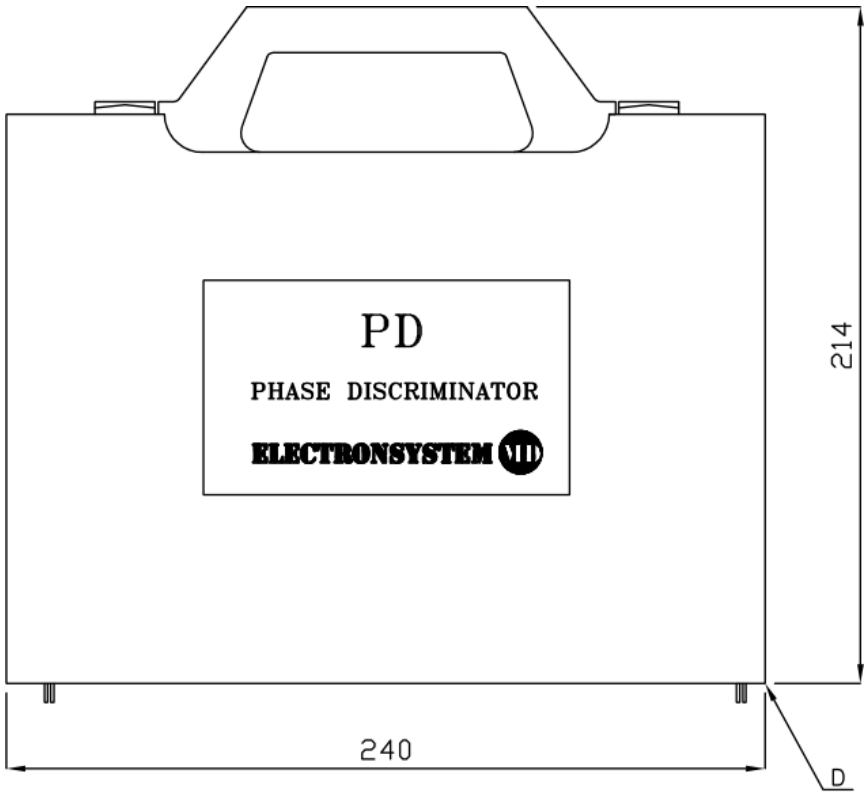

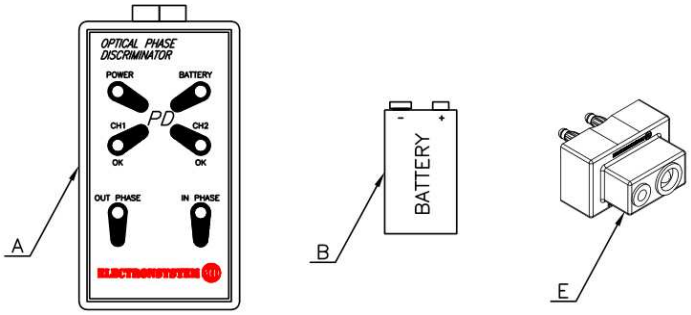

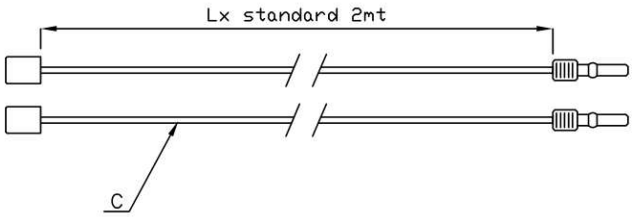

PD/V/VPIS CONTENT			
Reference	Quantity	Description	Drawing
A	1	PD	43911737
B	1	BATTERY REPLACEMENT 9V	–
C	1	OPTICAL CABLE PD/VDIS	43922315
D	1	PD BOX	–
E	2	OPTICAL ADAPTER LRM	43931338